5G Core Network

2G-4G Core network evolution

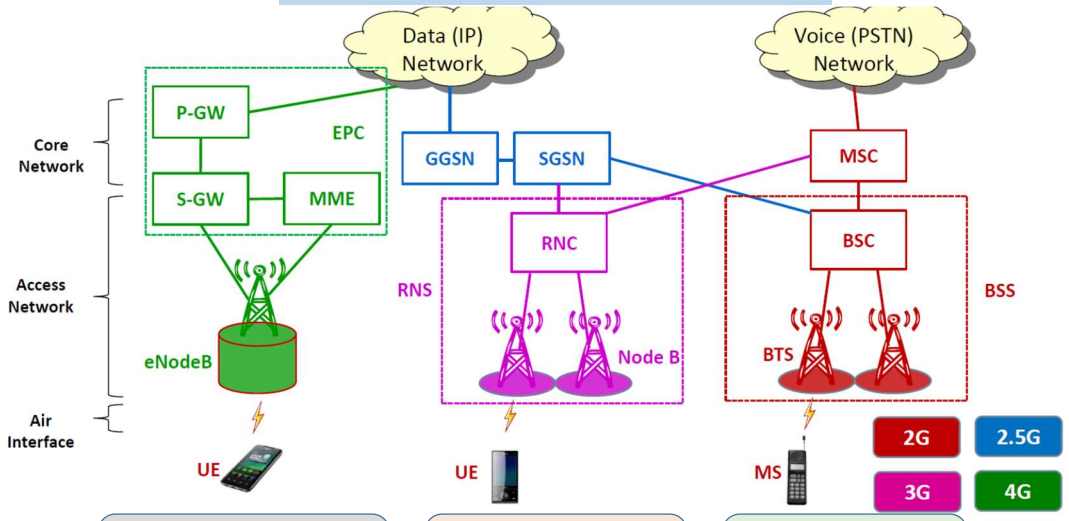

Interface specifications published by 3GPP

New services introduced slowly

Very little scope for third party customization

Source: 3g4g blog

EPC – Evolution from Release 8 to Release 14

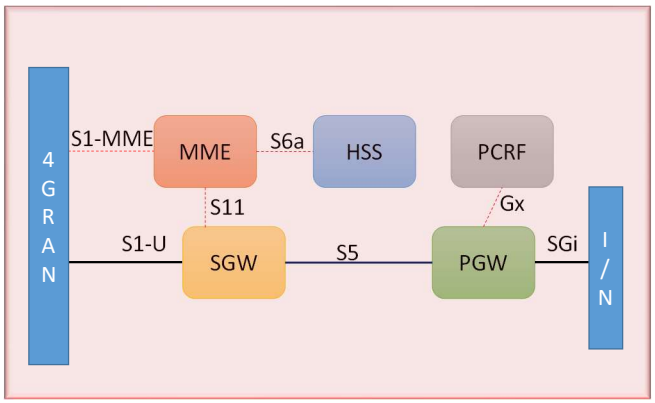

Release 8 - EPC

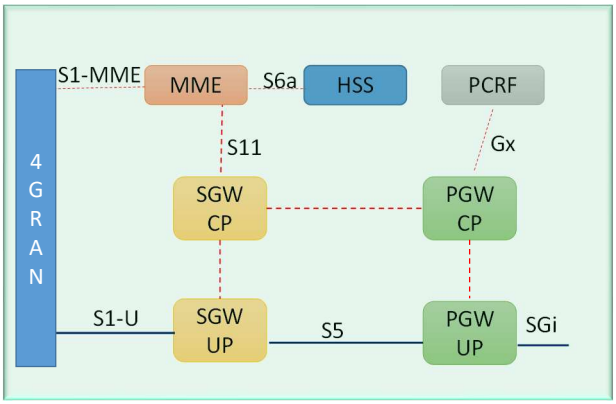

Release 14 – EPC with CUPS

EPC – Release 11

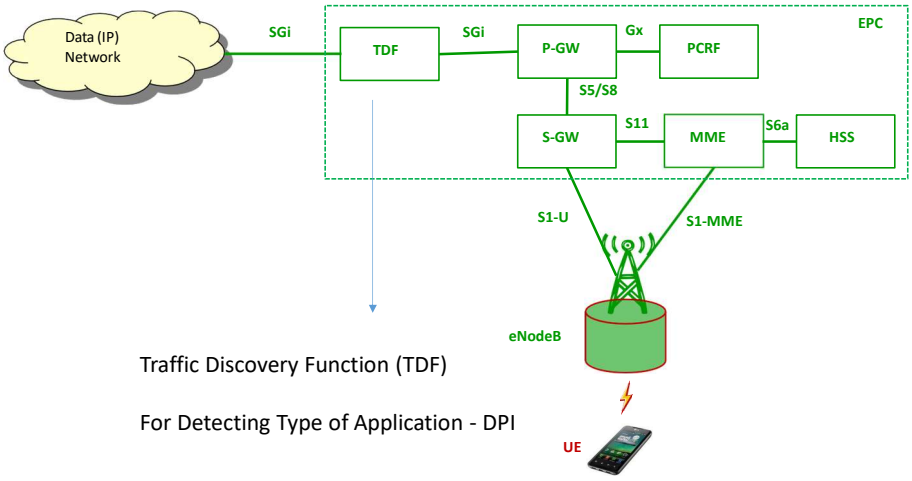

Traffic Discovery Function (TDF)

For Detecting Type of Application - DPI

Source: 3g4g blog

LTE - Control & User Plane Protocol Stacks

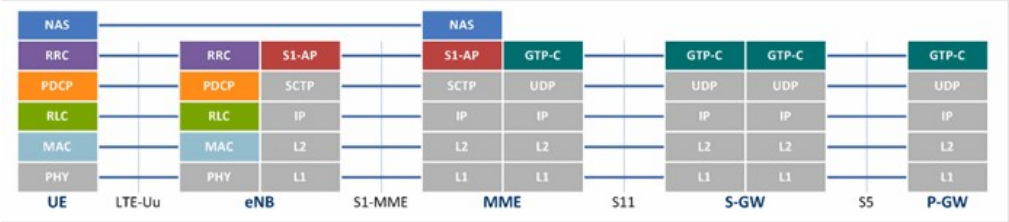

Control Plane Protocol Stacks

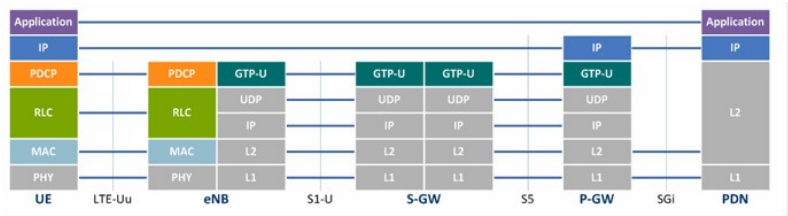

User Plane Protocol Stacks

Source: Netmanias

Example Message Flow for Bearer Establishment

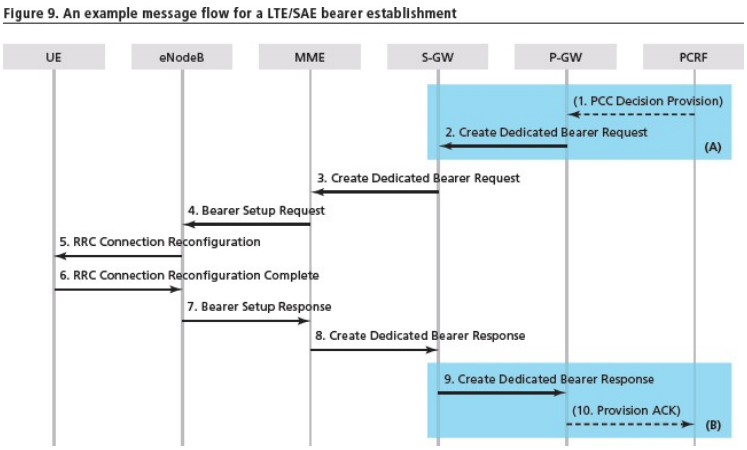

Source: Alcatel-Lucent Whitepaper

EPC with CUPS – Release 14

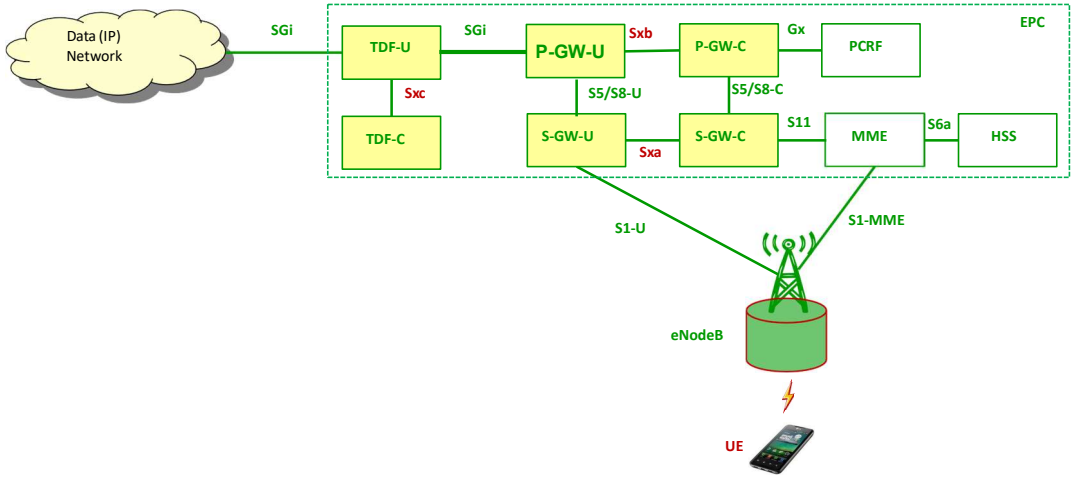

Source: 3g4g blog

3GPP CUPS Architecture

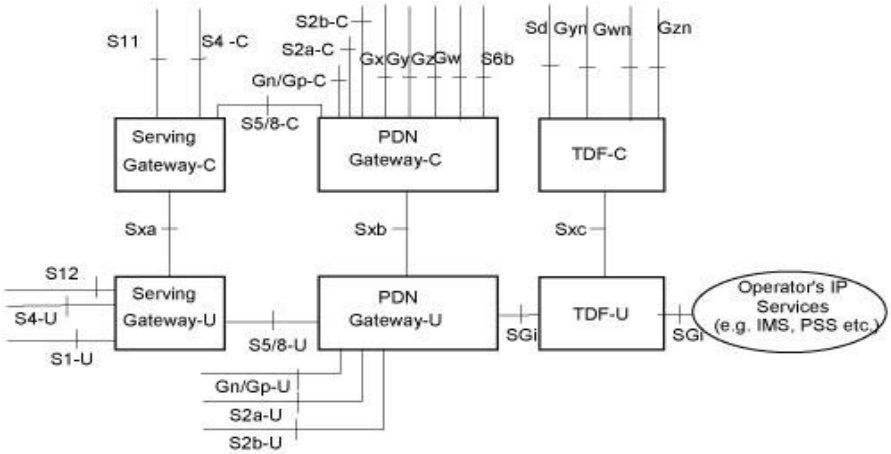

Source: 3GPP

High Level Principles for CUPS Architecture

- The CP function terminates the Control Plane protocols: GTP-C, Diameter (Gx, Gy, Gz).
- A CP function can interface multiple UP functions, and a UP function can be shared by multiple CP functions.
- An UE is served by a single SGW-CP but multiple SGW-UPs can be selected for different PDN connections. A user plane data packet may traverse multiple UP functions.
- The CP function controls the processing of the packets in the UP function by provisioning a set of rules in Sx sessions
- A legacy SGW, PGW and TDF can be replaced by a split node without effecting connected legacy nodes.

Control and User Plane Separation of EPC nodes (CUPS) (3gpp.org)

Advantages of CUPS Architecture

- Reducing Latency on application service, e.g. by selecting User plane nodes which are closer to the RAN or more appropriate for the intended UE usage type without increasing the number of control plane nodes.
- Supporting Increase of Data Traffic, by enabling to add user plane nodes without changing the number of SGW-C, PGW-C and TDF-C in the network.
- Locating and Scaling the CP and UP resources of the EPC nodes independently.
- Independent evolution of the CP and UP functions.
- Enabling Software Defined Networking to deliver user plane data more efficiently.

Source: 3GPP

- Further Reference:
- Control and User Plane Separation of EPC nodes (CUPS) (3g4g.co.uk)

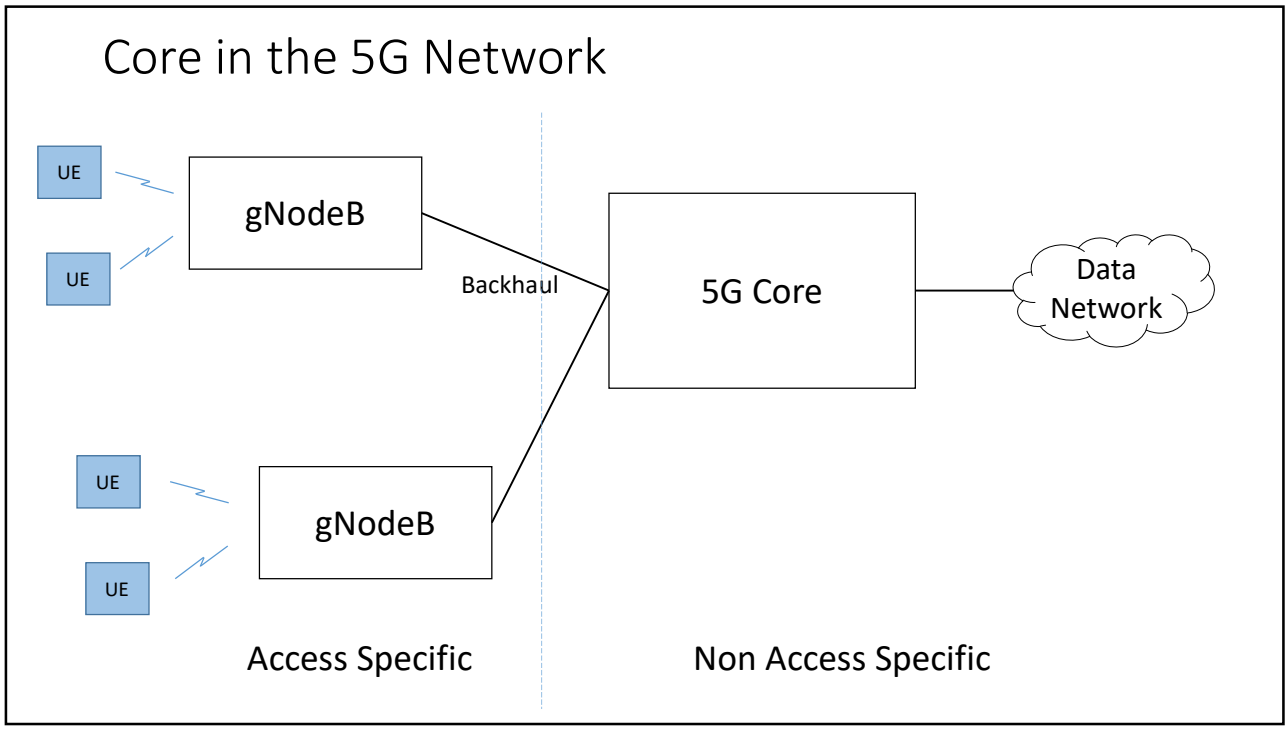
Core in the 5G Network
UE
UE
gNodeB
Backhaul
5G Core
Data Network
UE
UE
gNodeB
Access Specific
Non Access Specific

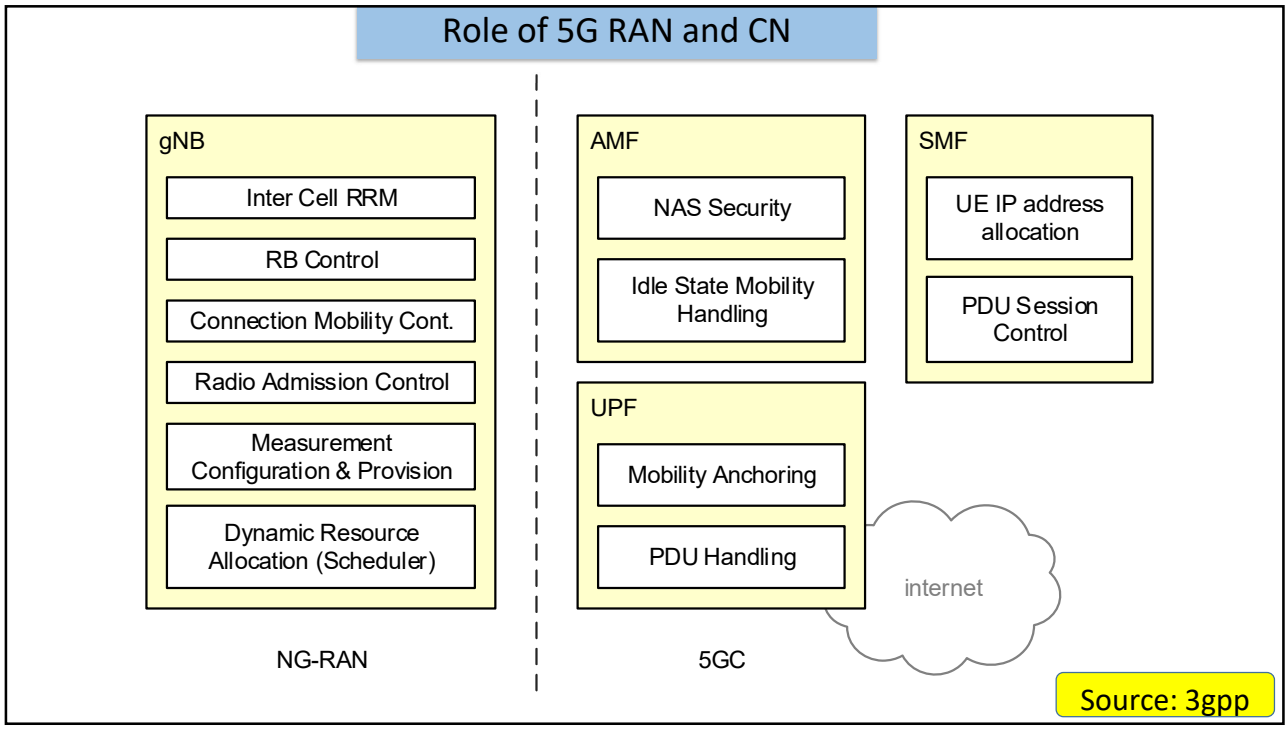
Role of 5G RAN and CN
gNB
Inter Cell RRM
RB Control
Connection Mobility Cont.
Radio Admission Control
Measurement Configuration & Provision
Dynamic Resource Allocation (Scheduler)
AMF
NAS Security
Idle State Mobility Handling
SMF
UE IP address allocation
PDU Session Control
UPF
Mobility Anchoring
PDU Handling
internet
NG-RAN
5GC
Source: 3gpp

5G Network Architecture

- Service Based Core Network
- APIs for accessing core network functions
- Network Slicing capabilities

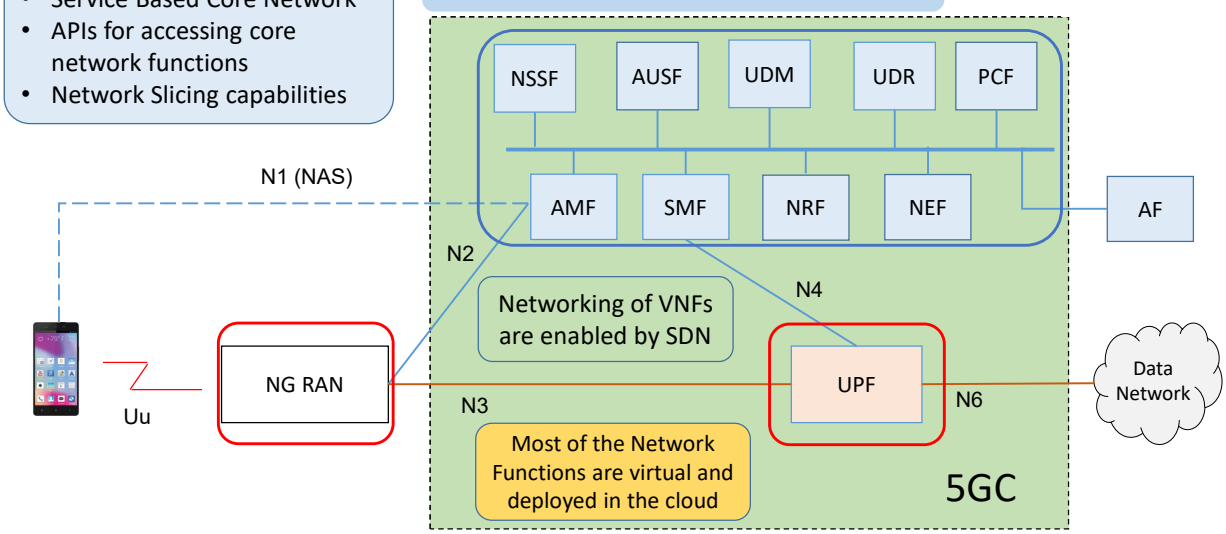

AMF	Access & Mobility Management	**NSSF**	NW Slice Selection	**SMF**	Session Management	**UDSF**	Unstructured Data Storage
AUSF	Authentication Server	**NEF**	Network Exposure	**UPF**	User Plane	**NWDAF**	Network Data Analytics
PCF	Policy Control	**NRF**	Network Repository	**UDM**	Unified Data Management	**AF**	Application Function

5G Core Network - Architecture Principles

- Clear separation of UP and CP
- Make the functions granular
- Virtualize functions
- Flexible placement of functions
- Elasticity: Scalable to meet SLAs. Movable to other servers.
- Resiliency: Be able to recreate after failure
- Service Continuity: Seamless or non-seamless continuity after failures or migration
- Service Assurance: Time stamp and forward copies of packets for Fault detection
- Energy Efficiency Requirements: Should be possible to put a subset of VNF in a power conserving sleep state
- Access agnostic

Core Network Functions

- Authentication of users irrespective of access techniques
- Central database of users, subscriptions etc for operators
- Mobility
- Connectivity to the external network and to the operator applications
- Policies
- Billing
- Legal Intercept
- QoS

Principle 1: Virtualise the Functions

- Network Function Virtualization (NFV)
  - Decouple Network Function from hardware
    - Develop as Virtual Network Functions i.e software functions
    - COTS hardware
  - Stateless, Scale on demand
  - Design to run on a cloud (VMs / Containers etc)

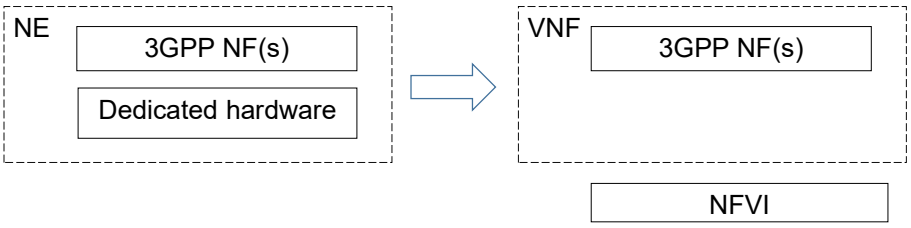

Principle 2: Control and User Plane Separation

- Control User Plane Separation
  - Control functions totally separated from Data plane functions
  - Independent scaling and provisioning
  - Data plane can move closer to user for low latency

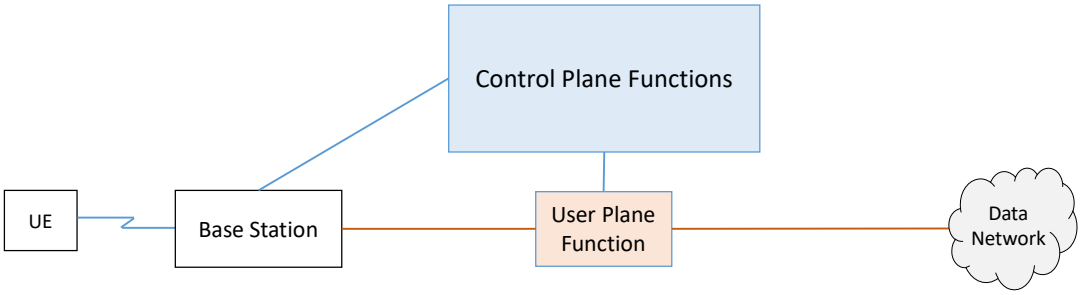

Principle 3: Service based

- Service Based Architecture (SBA)
  - Control plane components talk over HTTP
  - Network Functions as a suite of Services - RESTful APIs
- Making the Network Function Stateless
- Protocol based signaling -> API/Service based signaling

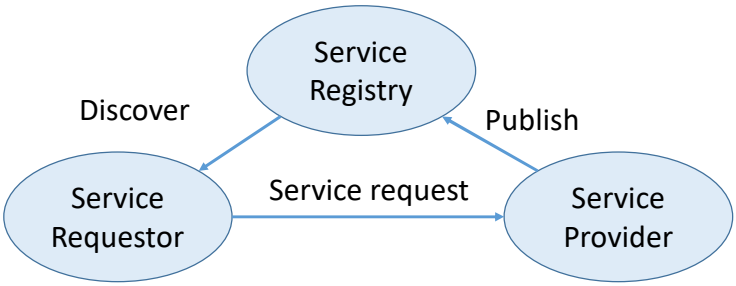

Service Based Architecture - Stack and Interfaces

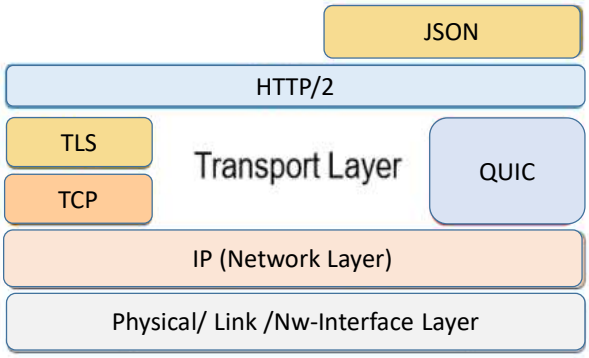

- Representational State Transfer (REST) API based communication
- HTTP/2 Protocol – Commands Like PUT/GET/DELETE etc
- JSON - Serialization Protocol
- Uses HTTP protocol to transport JSON format messages in REST API style

Evolution from 4G to 5G Core : EPC

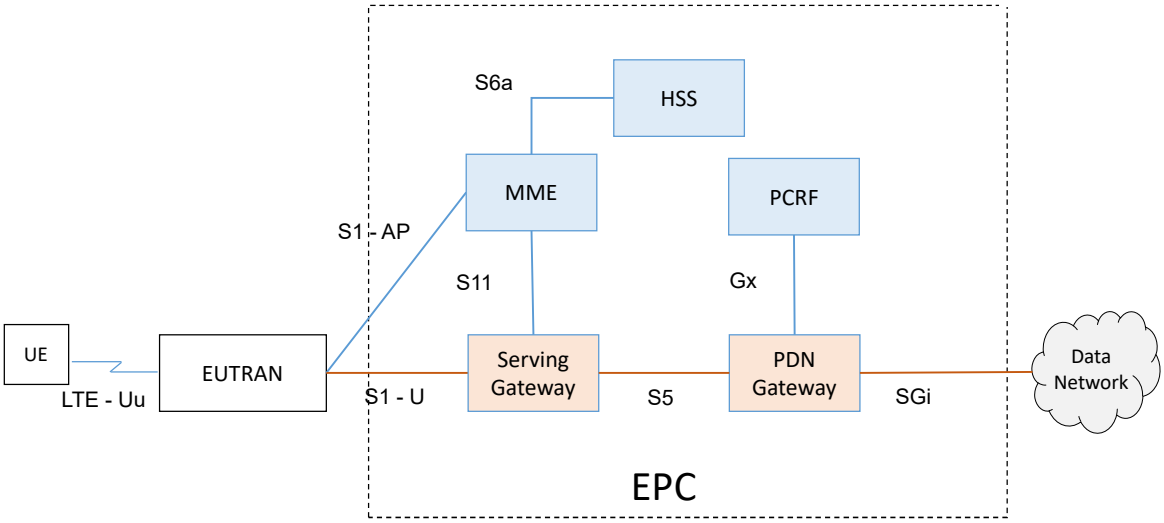

Evolution from 4G to 5G Core : 5G Core

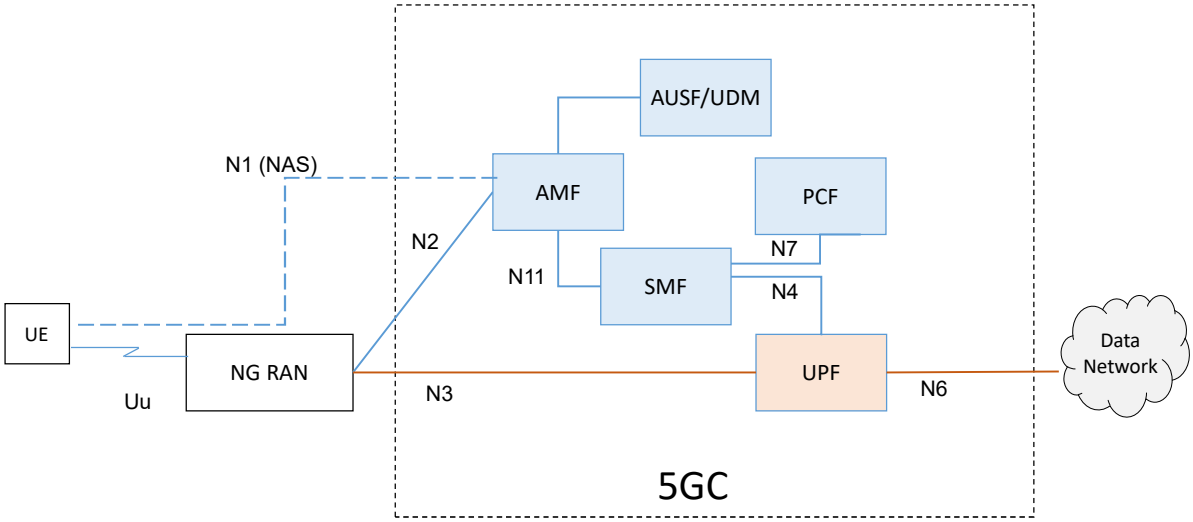

5G Core - Ref Point Representation

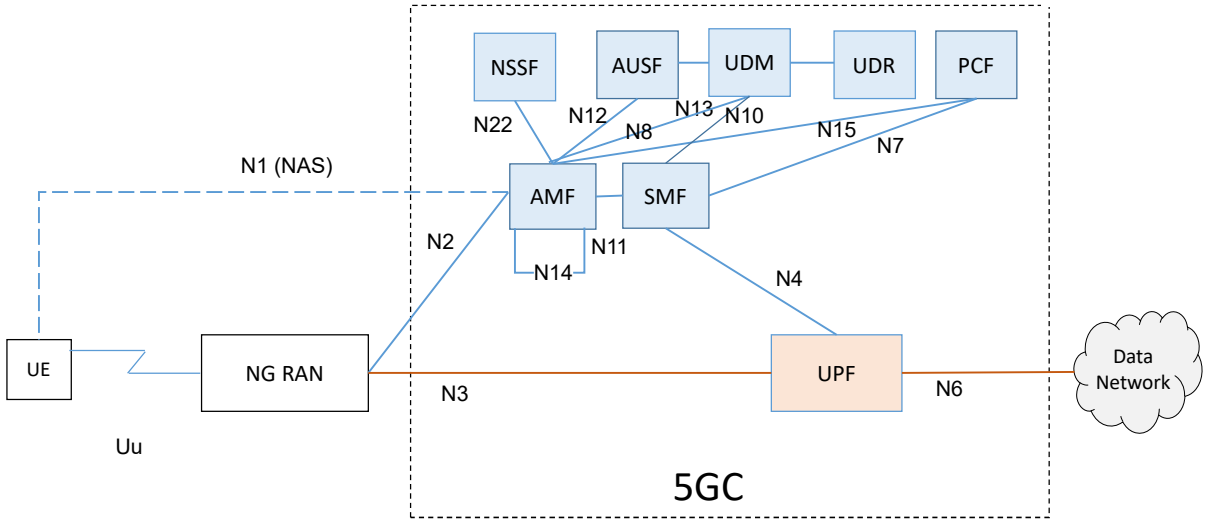

5G Core Architecture

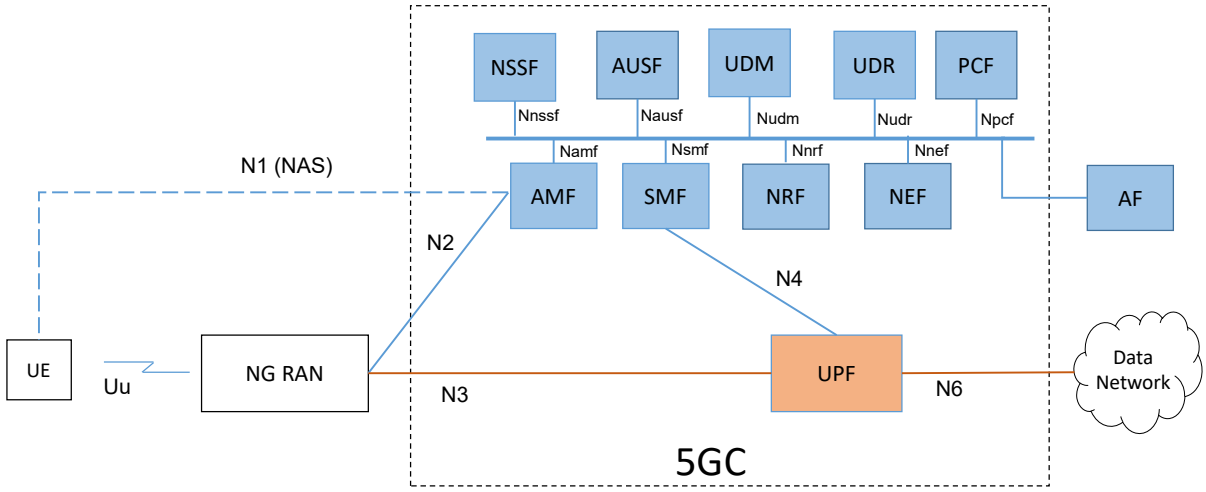

AMF	Access&Mobility Management	NSSF	NW Slice Selection	SMF	Session Management	UDSF	Unstructured Data Storage
AUSF	Authentication Server	NEF	Network Exposure	UPF	User Plane	NWDAF	Network Data Analytics
PCF	Policy Control	NRF	Network Repository	UDM	Unified Data Management	AF	Application Function

5G Core Functions

Access and Mobility Management function (AMF) supports: Termination of NAS signalling, NAS ciphering & integrity protection, registration management, connection management, mobility management, access authentication and authorization, security context management.

Session Management function (SMF) supports: session management (session establishment, modification, release), UE IP address allocation & management, DHCP functions, termination of NAS signalling related to session management, DL data notification, traffic steering configuration for UPF for proper traffic routing.

User plane function (UPF) supports: packet routing & forwarding, packet inspection, QoS handling, acts as external PDU session point of interconnect to Data Network (DN), and is an anchor point for intra- & inter-RAT mobility.

Authentication Server Function (AUSF) acts as an authentication server.

Unified Data Management (UDM) supports: generation of Authentication and Key Agreement (AKA) credentials, user identification handling, access authorization, subscription management.

Application Function (AF) supports: application influence on traffic routing, accessing NEF, interaction with policy framework for policy control.

New in 5G

Network Exposure function (NEF) supports: exposure of capabilities and events, secure provision of information from external application to 3GPP network, translation of internal/external information

NF Repository function (NRF) supports: service discovery function, maintains NF profile and available NF instances

Network Slice Selection Function (NSSF) supports: selecting of the Network Slice instances to serve the UE, determining the allowed NSSAI, determining the AMF set to be used to serve the UE

5G Core Network – Comparisons with EPC

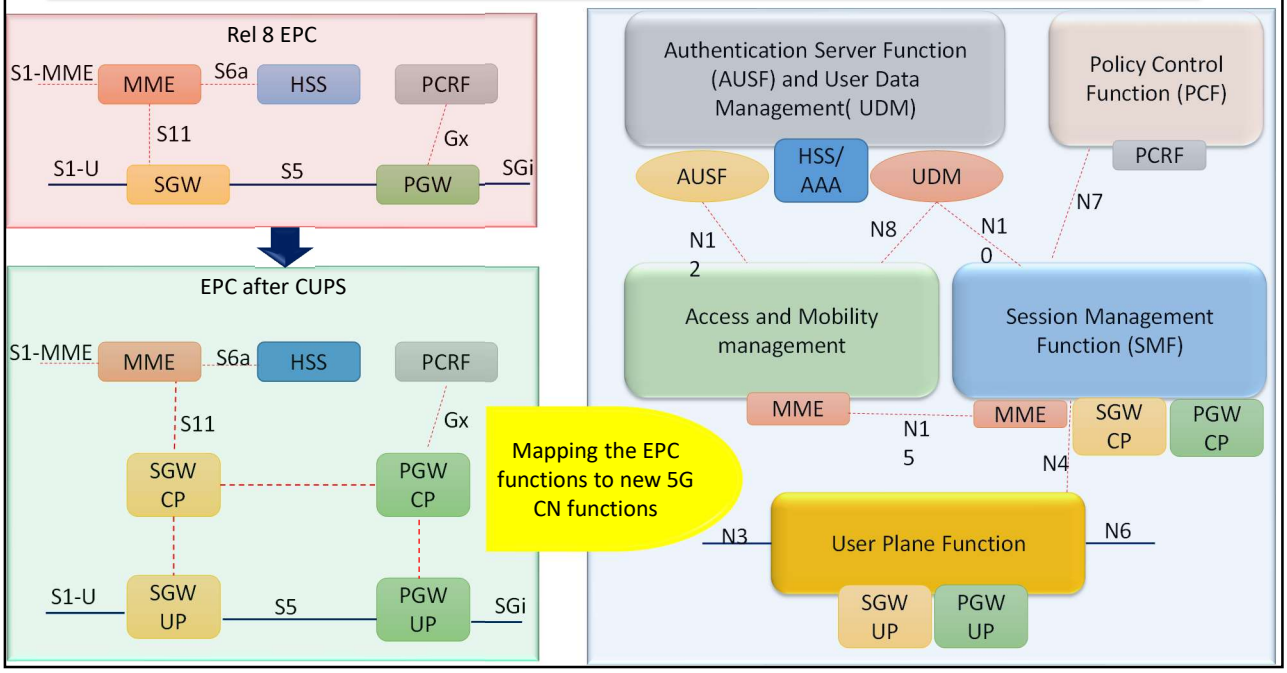

Need For Service Based Architecture ?

- 5G aims to become - global connectivity enabler and service platform for a broad variety of industries.
- 5G system not only opens up towards a whole new group of verticals, it also embraces the technologies which are and will be used by these verticals.
- Based on REST architecture design paradigm

HTTP/2

- HTTP/2 (originally named HTTP/2.0) is major revision of the HTTP network protocol used by the World Wide Web
- HTTP/2 is binary, instead of textual.
- HTTP/2 is fully multiplexed
- Helps in reducing latency in Control Plane

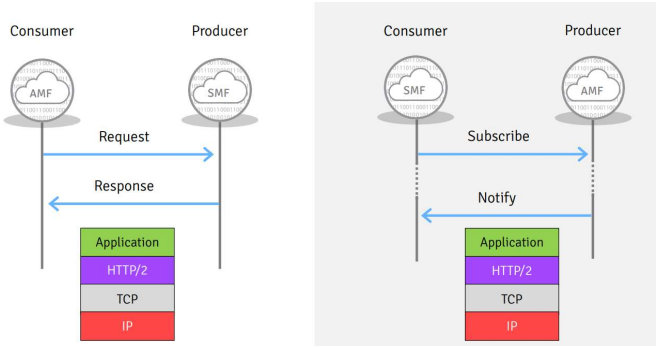

Key System Procedures involving 5G Core

Connection, Registration and Mobility Management procedures

- Registration management
  - Authentication
  - Security mode
  - UE context establishment
- UE Configuration Update

Session Management procedures

- Data Sessions for carrying data traffic
  - DNNs -> PDU Sessions -> QoS Flows -> IP Traffic
  - PDU Session types: IPv4, IPv6, Ethernet, Unstructured
  - UE can establish the PDU session over any AN available
- PDU Session Establishment/Modification/Release

Network Functions

- Access and Mobility Management Function(AMF)
- Session Management Function(SMF)
- User Plane Function(UPF)
- Policy Control Function(PCF)
- Authentication Server Function(AUSF)
- Unified Data Management(UDM)
- Application Function(AF)
- Network Exposure Function(NEF)
- NF Repository Function(NRF)
- Network Slice Selection Function(NSSF)

AMF - Access and Mobility Management Function

- Registration management
- Connection management
- Reachability management
- Mobility Management
- Access Authentication
- Access Authorization
- NAS ciphering and integrity protection
- Supporting NAS for non-3GPP Access

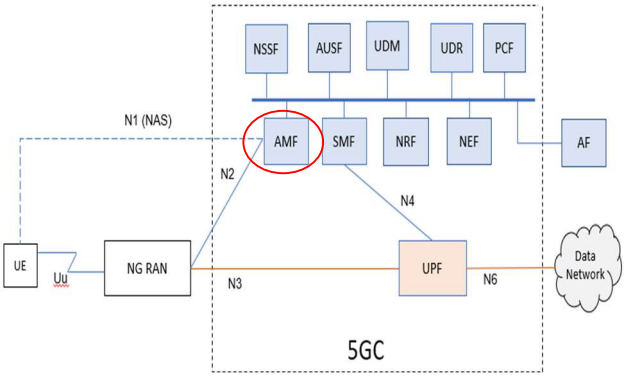

AMF - Access and Mobility Management Function – Key Service

Namf_Communication

This service enables a NF to communicate with the UE through N1 NAS messages or with the AN (both UE and non UE specific).

Following are the key functionalities of this NF service

- Provide service operations for transporting N1 messages to the UE
- Allow NFs to subscribe and unsubscribe for notifications of specific N1 messages from the UE
- Allow NFs to subscribe and unsubscribe for notifications about specific information from AN
- Provide service operations for initiating N2 messages towards the AN
- Security Context Management
- UE information management and transfer (including its security context)

SMF – Session Management Function

- Session Management
  - Establishment/Modify/Release
- UE IP address allocation
- Selection and control of UP function
- Configuring traffic steering at UPF to route traffic to proper destination
- Charging : Support of charging interfaces; Control and coordination of charging data collection at UPF
- Downlink Data Notification

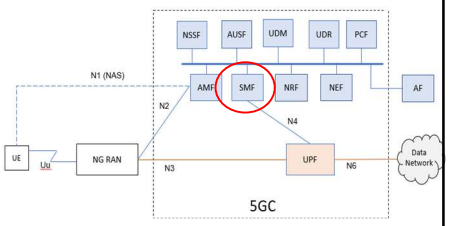

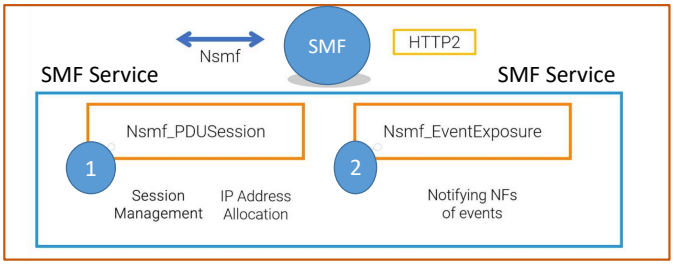

UPF – User Plane Function

- PDU Session point of interconnect to DN
- Packet routing & forwarding
- Packet inspection
- QoS handling for user plane
- Policy rule enforcement
- Lawful intercept (UP level)
- Traffic usage reporting
- Uplink Traffic verification (SDF to QoS Flow mapping)
- Transport level packet marking in the uplink and downlink
- Downlink packet buffering and notification triggering

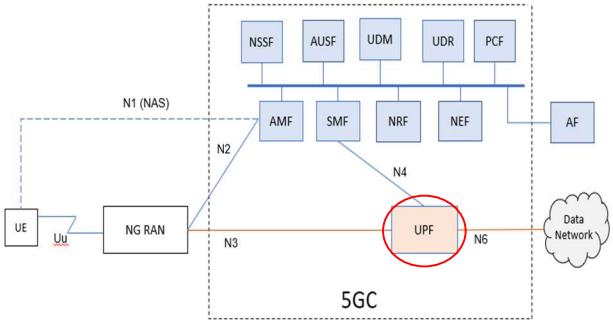

UDR - Unified Data Repository

Storage and retrieval of Data :

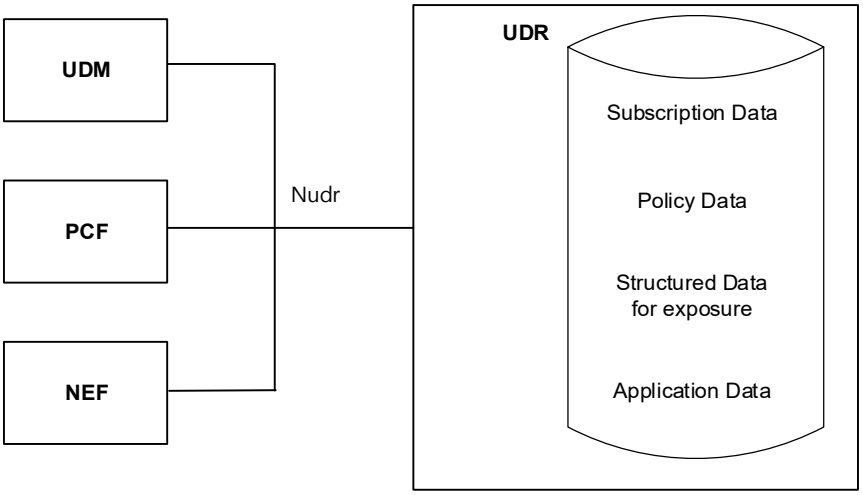

UDM - Unified Data Management

- Subscription management
- User Identification Handling
  - SUPI for each subscriber
- Support of de-concealment of privacy-protected subscription identifier (SUCI)
- Generation of 3GPP AKA Authentication Credentials
- Access authorization (Ex. Roaming)

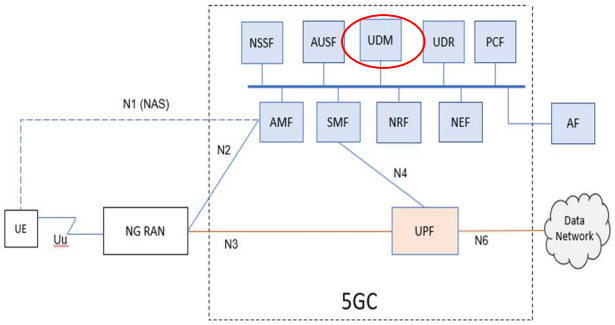

The Subscription Data is stored in UDR (not in UDM)

AUSF — Authentication Server Function

- The AUSF performs the authentication function of user and network
- Implements the EAP authentication server
- Obtains Authentication Vectors from UDM

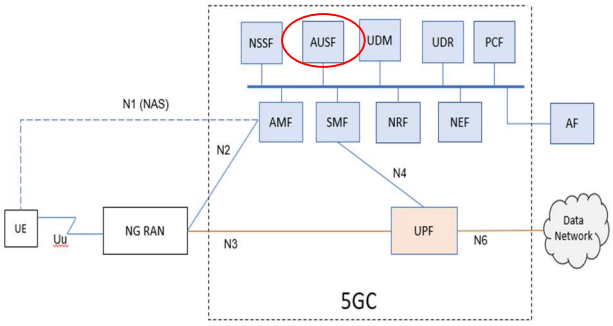

NEF - Network Exposure Function

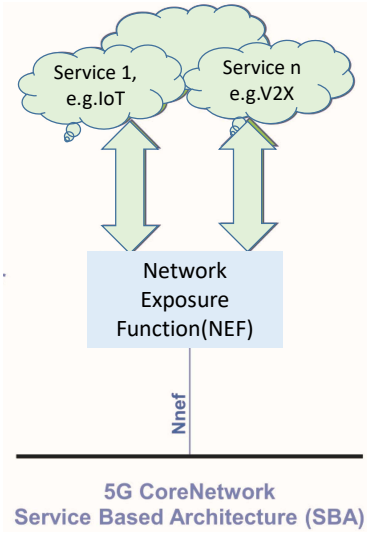

- Exposing network capabilities and events for 3rd Party, AFs etc
- Translates information exchanged with AF and other NFs masking network and user sensitive information
- Service Capability Exposure Function (SCEF) in 4G evolves to NEF in 5G
- Can use Common API Framework (CAPIF) for external exposure

PCF — Policy Control Function

- The 5G PCF performs the same function as the PCRF in 4G networks.
- Provides policy rules for control plane functions. This includes network slicing, roaming and mobility management.
- Accesses subscription information for policy decisions taken by the UDR.
- Supports the new 5G QoS policy and charging control functions.

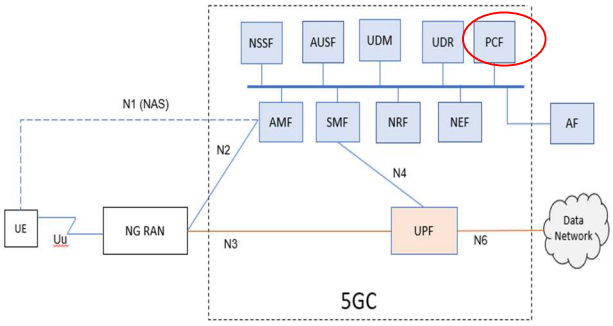

NRF - Network Repository Function

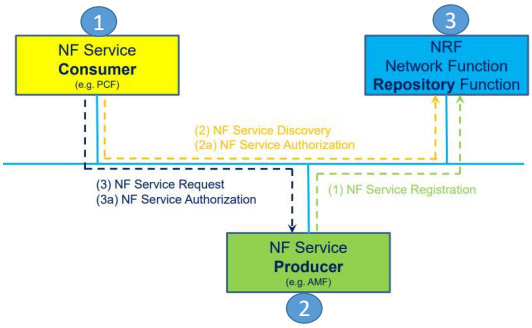

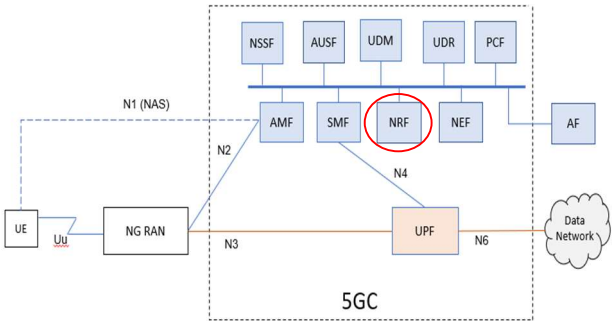

- Service registration and Discovery function
- Maintains NF profile and available NF instances
- Reduces Provisioning and Configuration efforts
- Allows other NFs to subscribe and get notified about other NFs

NRF - Network Function Repository Function – Key Services

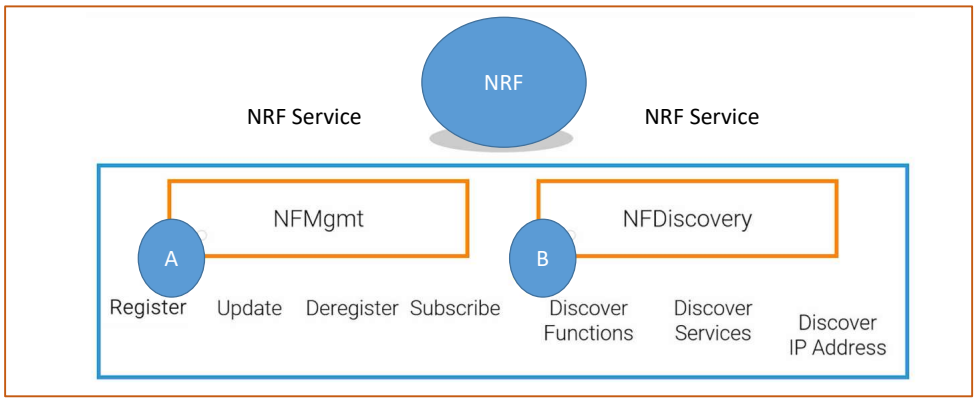

NRF - Network Repository Function – Key Services

NF register in NRF and advertise services as producer

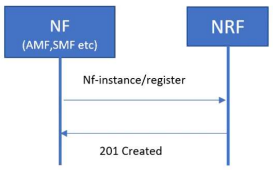


```
201 Created, DATA[1],

  Object
    Member Key: heartBeatTimer
        Number value: 60
        Key: heartBeatTimer
    Member Key: nfProfile
      Object
        Member Key: nfInstanceId
        Member Key: nfType
        Member Key: nfStatus
        Member Key: plmn
        Member Key: sNssais
        Member Key: ipv4Addresses
        Member Key: capacity
        Member Key: amfInfo
        Member Key: nfServices
      Key: nfProfile
```

```
PUT /nnrf-nfm/v1/nf-instances/5d6fee84-f

Object
  Member Key: nfInstanceId
  Member Key: nfType
  Member Key: nfStatus
  Member Key: plmn
  Member Key: sNssais
  Member Key: ipv4Addresses
  Member Key: capacity
  Member Key: amfInfo
    Object
      Member Key: amfSetId
      Member Key: amfRegionId
      Member Key: guamiList
      Member Key: taiList
    Key: amfInfo
  Member Key: nfServices
```

Source: Youtube

[(9) 5G Core - Network Repository Function (NRF) - YouTube]

NSSF — Network Slice Selection Function

- The NSSF performs the following functions:
- Selecting of the Network Slice instances to serve the UE
- Determining the allowed NSSAI
- Determining the AMF set to be used to serve the UE

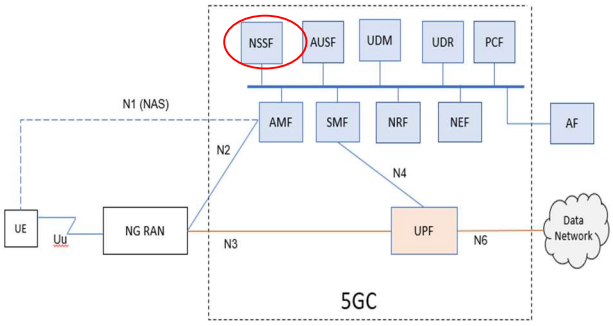

CHF — Charging Function

CHF (CHarging Function):

- It is an entity within CCS (Converged Charging System) which provides
  - Account Balance Management function (**ABMF**) for balance management/quota management
  - Rating Function (**RF**) for measuring the events
  - Charging Gateway Function (**CGF**)
- Altogether it is called as Converged Charging Server (**CCS**)
- CHF combines the functionality of **OCF** (Online Charging Function – Pre Paid) and **CDF** (Charging Data Function-Post Paid).
- CHF enables Online and Offline Charging by closely interfacing with NF Consumers

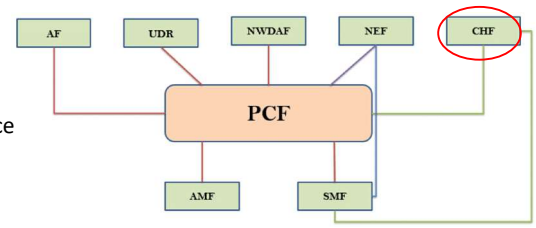

Access & Non-Access Control Plane Protocol stack

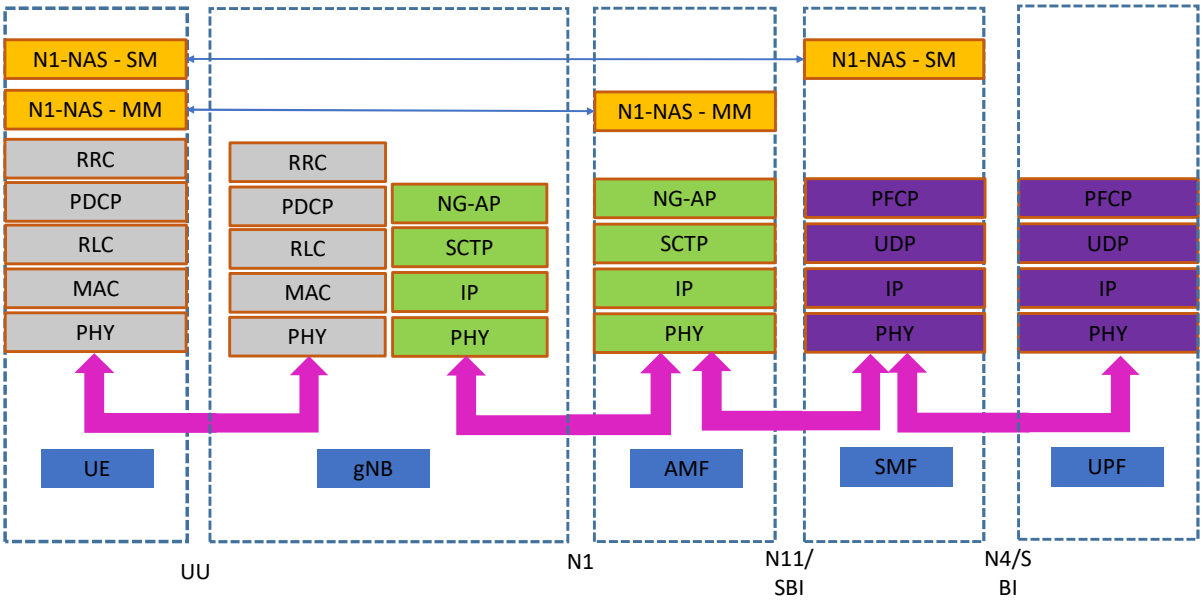

NGAP — Next Generation Application Protocol

- The key difference between NGAP and S1AP is that S1AP was designed only for 3GPP access (E-UTRAN) and not non-3GPP accesses
- **NGAP** is applicable to **any access** and defined in **3GPP TS 38.413** specification. It has support for specific parameters related to non-3GPP accesses
- **N2 interface** between gNB and AMF performs management functions, for example **NG Setup**, Reset, **Error Indication**, and Load Balancing

The signalling over **NGAP** provides following two types of services:

- **Non UE-associated Service:** These NGAP services are related to **N2 interface** instance between the gNB and AMF and used to establish the NGAP signaling connection between gNB and AMF, handle some overload situations and to exchange gNB and AMF configuration data

- **UE-associated services:** These are related to an UE and involves signalling related to procedures where an UE activity is involved, e.g. at Registration, PDU Session Establishment, Deregistration etc.

PFCP — Packet Forwarding Control Protocol

The CP function controls the packet processing in the UP function by :

- Establishing the PFCP session
- Modify the PCFP session
- Deleting the PFCP session

Provisioning of rules:

- Packet Detection rule (PDR)
- Forward action rule (FAR)
- QOS enforcement rule (QER)
- Usage's report rule (UAR)
- Buffering action rule (BAR)

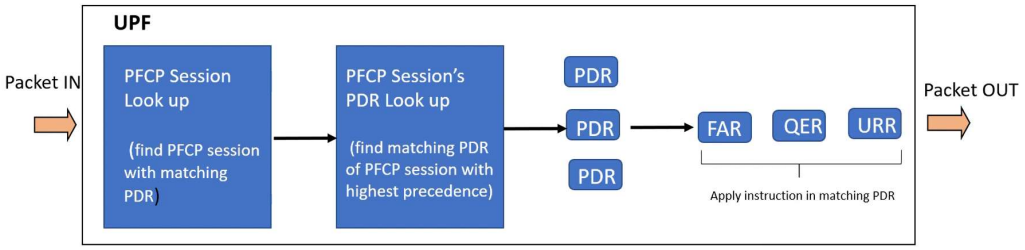

User Plane Protocol stack

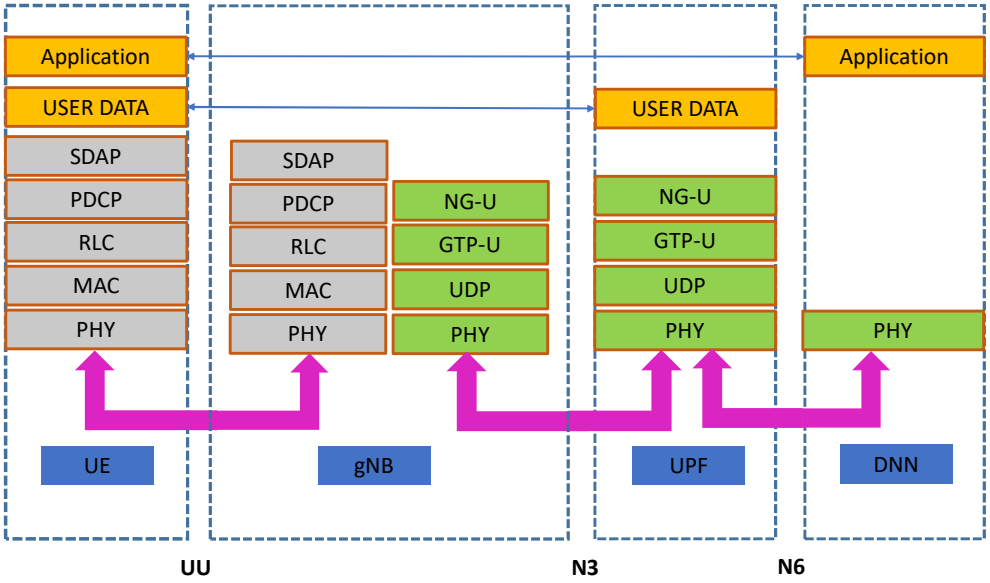

Non Access Stratum Layer - NAS

- NAS used to convey non-radio signaling between the User Equipment (UE) and the 5G Core AMF/SMF in specific
- Peer entities run at UE and 5GC – AMF & SMF
  - AMF : 5GMM – 5G Mobility Management Procedures
  - SMF : 5GSM – 5G Session Management Procedures
- At UE end, Interfaces with the Application and the AN layers i.e. RRC
- At AMF, interfaces with AN through NG-AP and through SBI to SMF for Session Management Functions
- Access control, Authentication, Mobility control, AN link management
- Routes Session Management procedures to SMF
  - Session setup, session modification and session release

NAS Procedures

- ❑ UE Registration and De-Registration
  - Initial , Mobility and Periodic
  - Authentication and Security setup
- ❑ Mobility Management Procedures
  - Tracking Area / Registration Area Management
  - Identification Procedures
  - UE Configuration Management Procedures
- ❑ PDU session management Procedures
  - Creation/Modification/deletion
  - QoS flow creation/modification/deletion
- ❑ AN Link Management Procedures
  - IDLE /ACTIVE transition
  - Service Request, Notification procedures
- ❑ Paging Process

Thank You